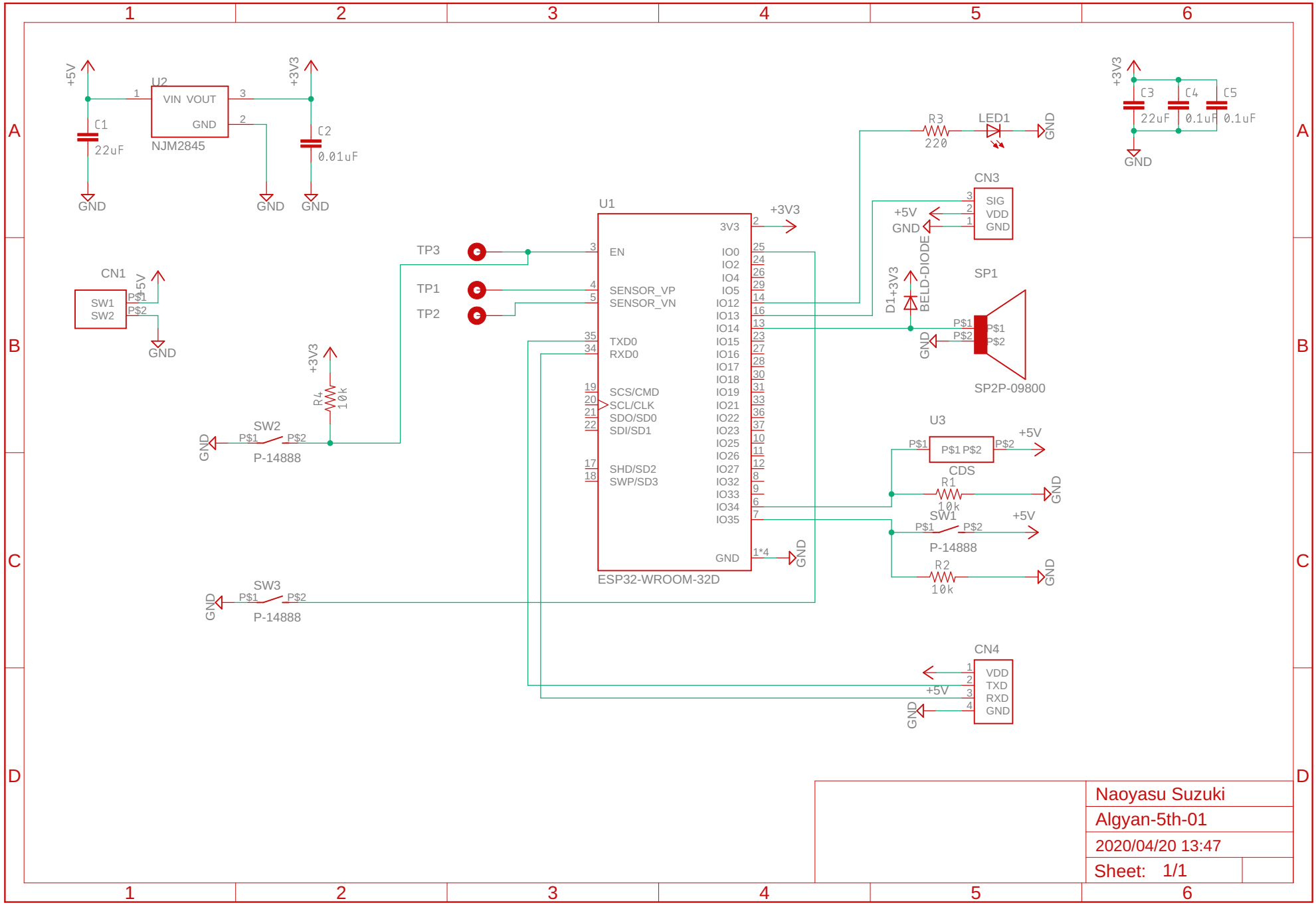

Naoyasu Suzuki	
Algyan-5th-01	
2020/04/20 13:47	
Sheet: 1/1	